R4DVI04_R4DIK04 4AI-4DI-4DO Mamual

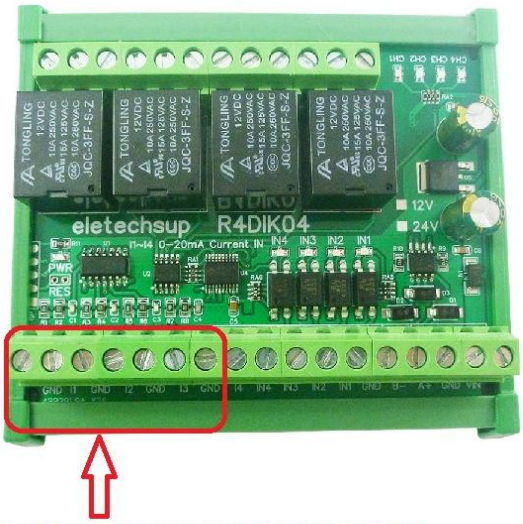

4-Channel 0-20MA/4-20MA
Current Analog Input

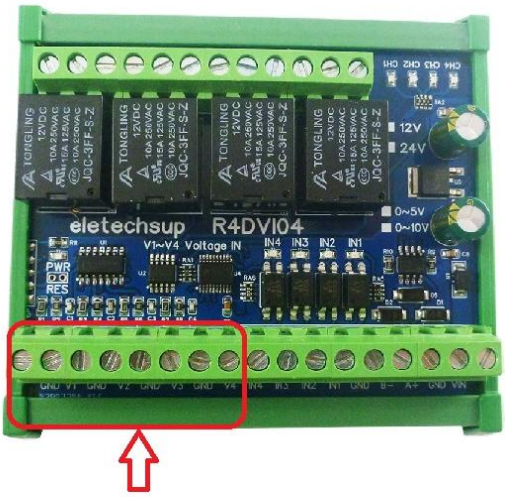

4-Channel 0-5V/0-10V
Voltage Analog Input

Features:

1 Working voltage: DC 12V (12V version); 24V (24V version)

2 Working current: standby 10MA, 1 relay conducts 38MA, 2 relays conducts 67MA, 3 relays conducts 92MA, 4 relays conducts 120MA

3 R4DIK04 version: 4-channel 0-20MA/4-20MA electric current analog input, 4-channel NPN photoelectric isolation switch input, 4-channel 10A relay switch output

4 R4DVI041 version: 4-channel 0-5V/0-10V voltage analog input, 4-channel NPN photoelectric isolation switch input, 4-channel 10A relay switch output

5 Support standard Modbus RTU command, function code: write 05/06/15/16 read 01/02/03/04

6 With hardware restore factory settings function, with TVS anti-surge protection

7 In MODBUS command mode, it can support up to 64 devices in parallel

8 The default baud rate is 9600BPS, the baud rate can be selected by command 2400 4800 19200 38400 57600 115200BPS

9 You can choose the parity mode is no parity, even parity and odd parity

10 You can set the data sending return time, the maximum can be set to 1000ms

11 size 92 * 72 * 12mm (circuit board) 95 * 82*40mm (with rail box):

12 Weight: 93 grams (circuit board); 167 grams (with rail box)

13 Maximum load: 10A/250VAC, 10A/125VAC, 10A /30VDC, 10A /28VDC, 10A /12VDC

DIN rail Box parameters:

Product model: UM72
Color: Green
Width: suitable for PCB board width UM72(72mm)
Insulation grade: flame-retardant VO grade
Backplane length: suitable for 92 mm PCB boards
Net weight: 85g
Installation: DIN35 and C45 rail

Wiring diagram：

4CH 0-10V voltage analog input (R4DVI04) / 4CH 0-20MA current analog input (R4DIK04)
4CH NPN photoelectric isolation switch input
4CH 10A relay switching output

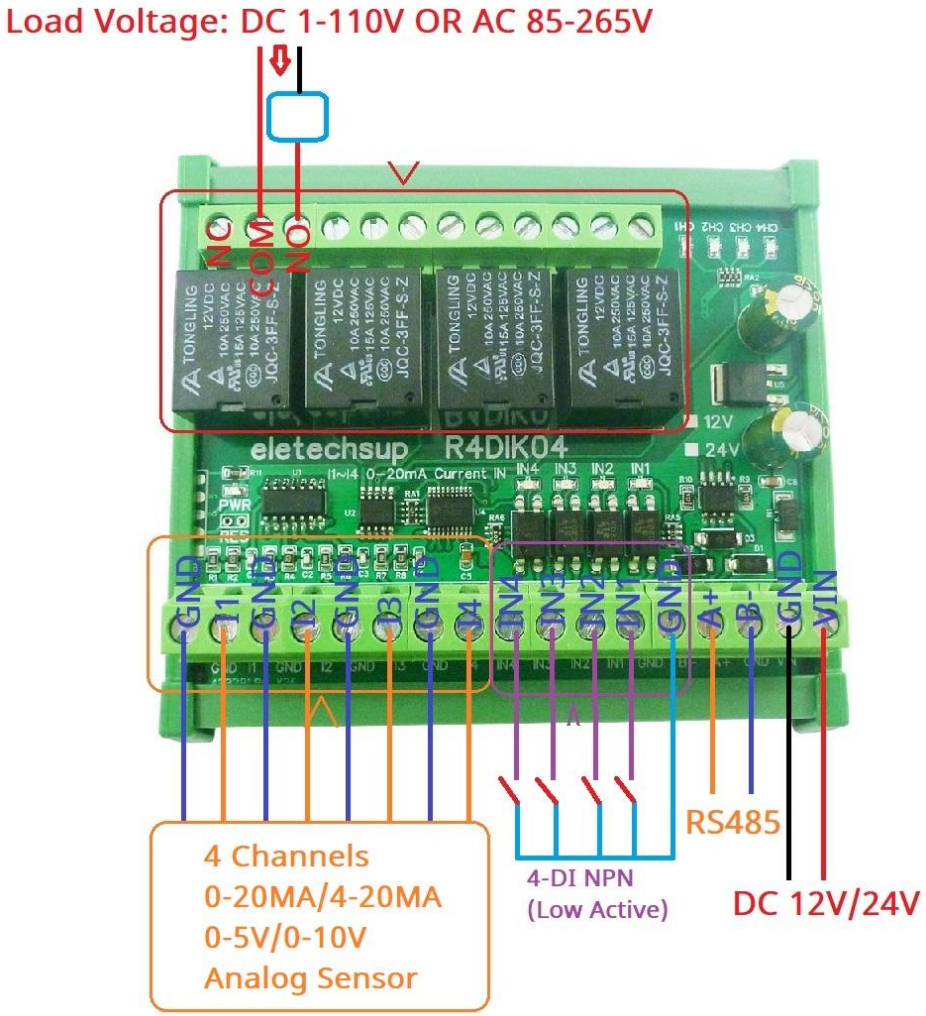

Typical applications:

1 Control a single module

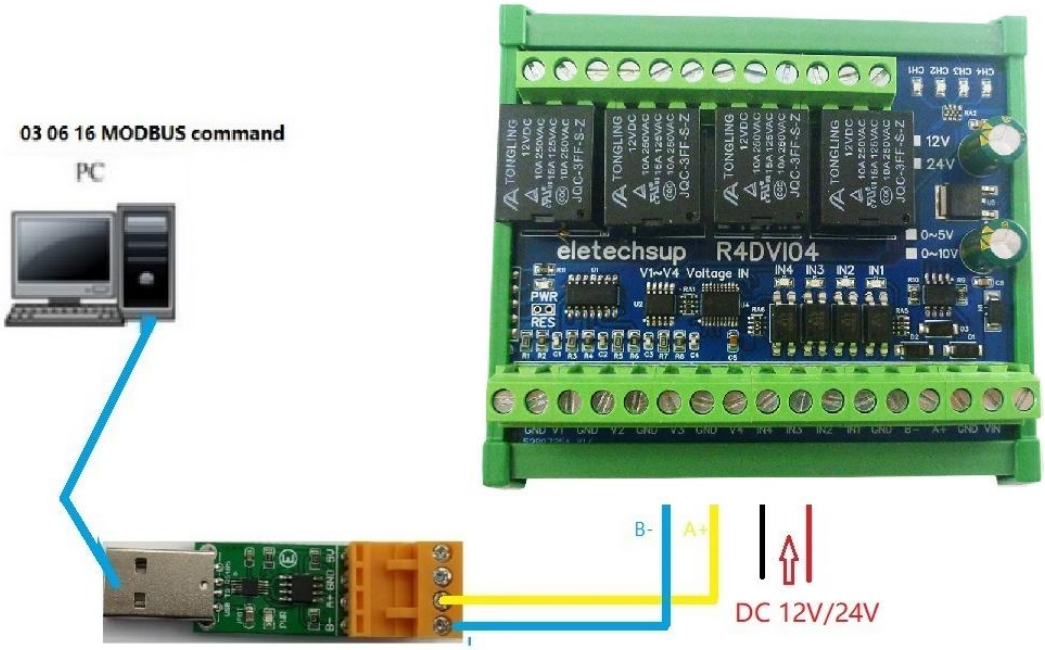

2.Control multiple modules

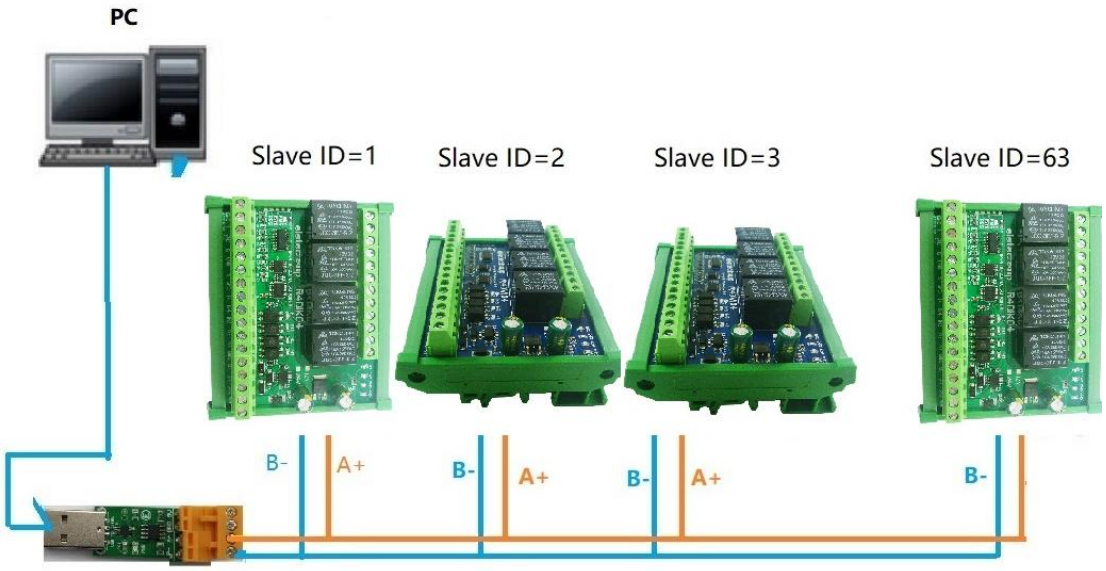
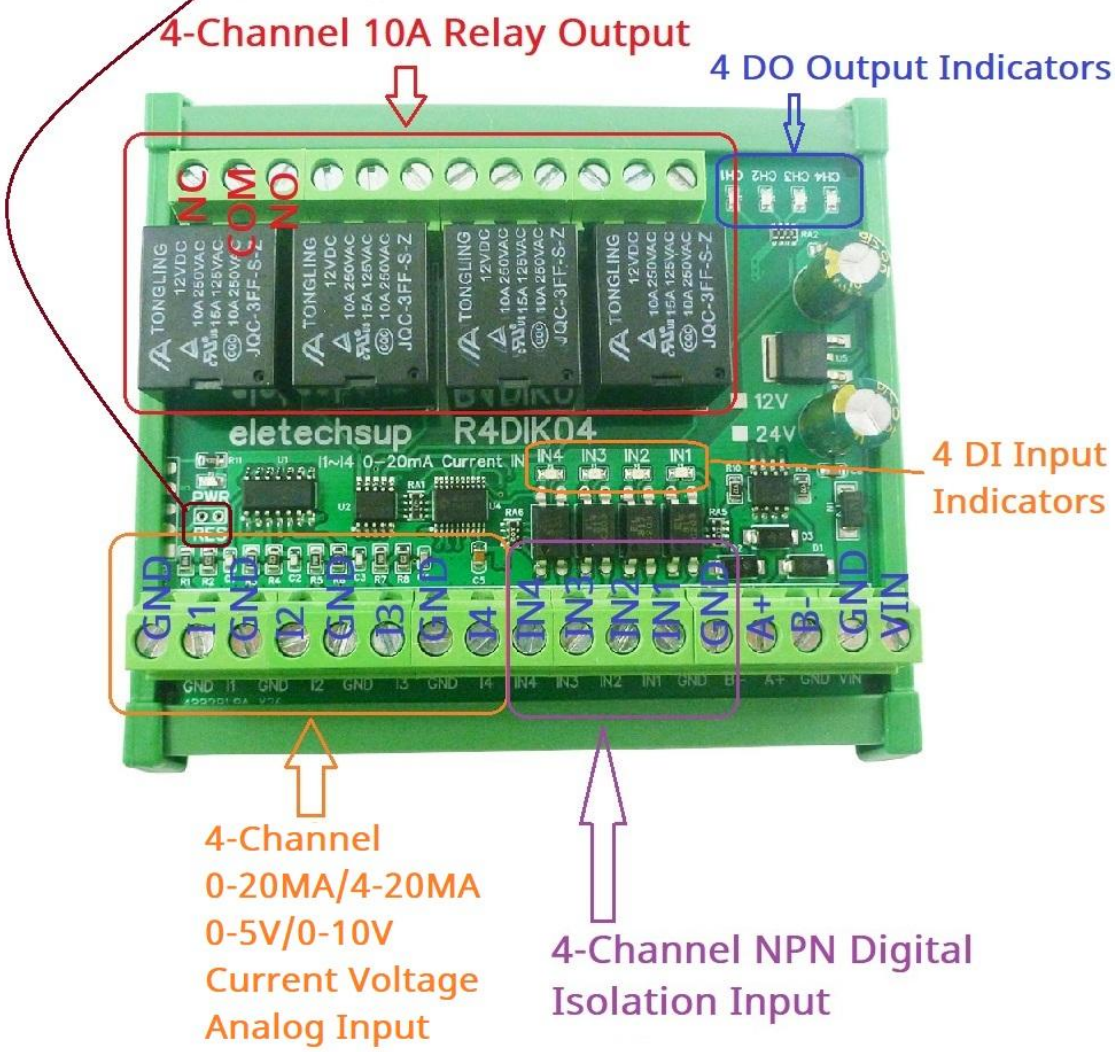
Factory Settings: short the RES jumper for 5 seconds to restore the factory settings.